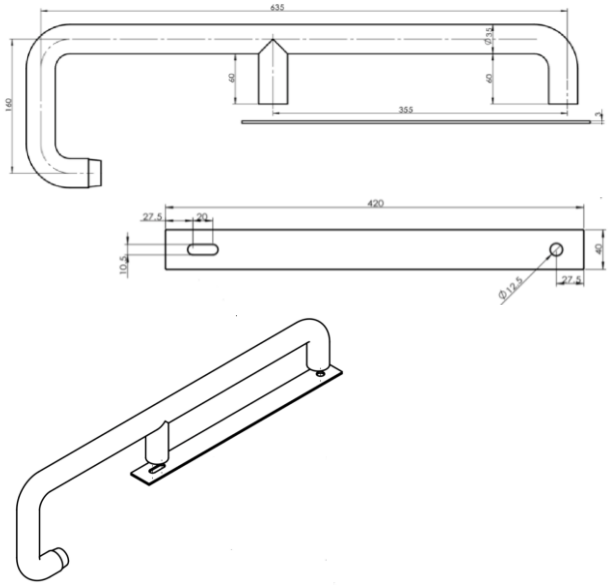

Brand

LOUIS

Product Name

LGB6316

Description

- Basin grab bar
- Fade resistant, lockable and hygienic
- High life-expectancy

Color / Material

304 Stainless Steel

Specifications

- Length of grab bar: 635 mm
- Diameter of grab bar: 35 mm
- Maximum loading capacity of 130kg
- All Grab bars can only be installed on solid concrete wall and solid brick wall
- For this case, it can also be installed on partition wall
- Regular maintenance and inspection is required