Excellent

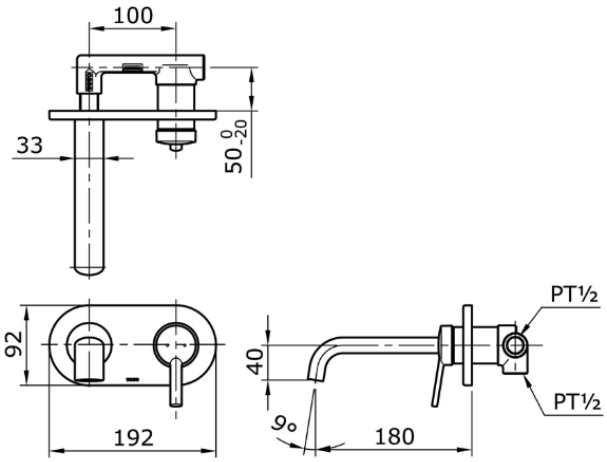

Brand

TOTO

Product Name

TX120LV

Description

- Single lever wall mounted basin mixer

Colour / Material

Chrome

Specifications

Spout length	: 180 mm
Water pressure	: 0.05MPa ~ 0.75MPa